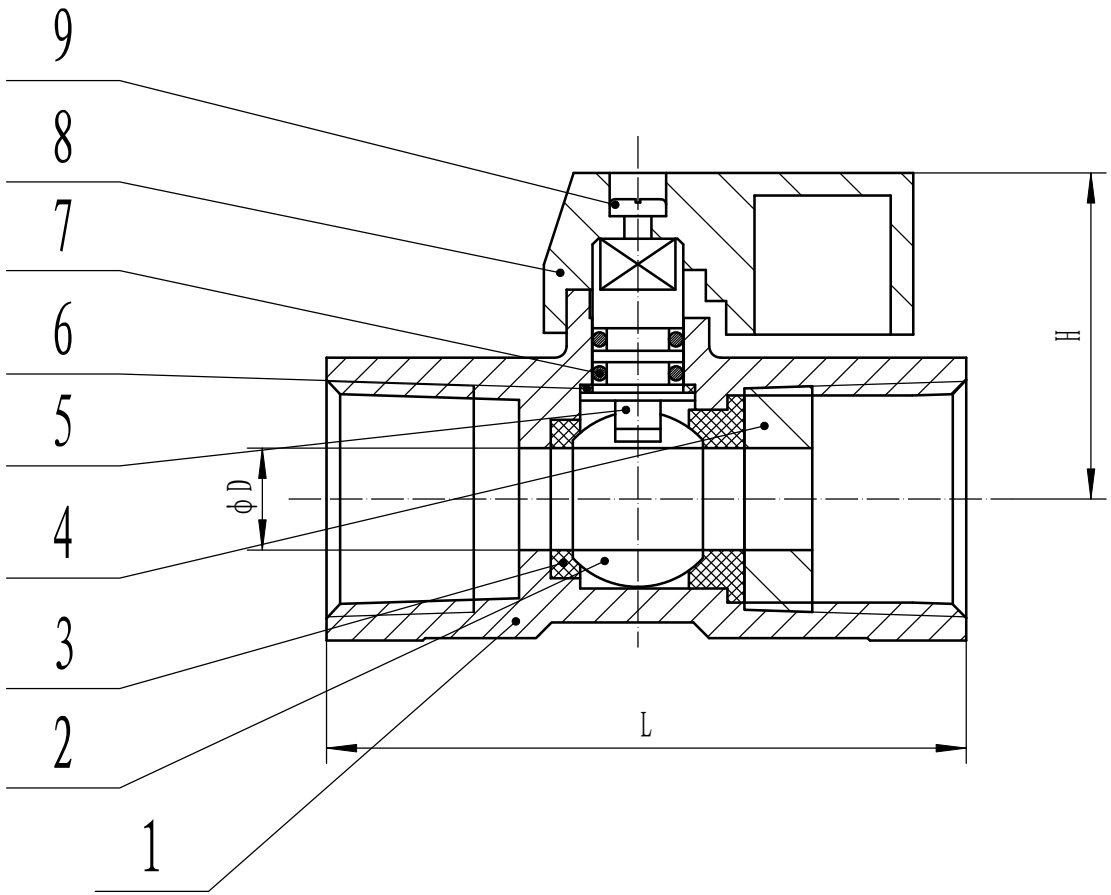

	D	L	H
1/4	4.6	46	26
3/8	7	51	28
1/2	9	56.5	30

NO.	PART NAME	MATERIAL	QTY
1	BODY	316	1
2	BALL	316	1
3	SEAT	PTFE	2
4	INSERT	316	1
5	STEM	304	1
6	THRUST WASHER	PTFE	1
7	O-RING	NBR	2
8	HANDLE	ALUMINIUM ALLOY	1
9	CONICAL SPRING WASHER	304	1

FEMALE*FEMALE

1PC MINI BALL VALVE

1/4-1/2